OpenRefill Technical Architecture:

Urefill Version

2026/03/03

Overview

The U-Refill cabinet contains 4 liquid personal care dispensers. Each dispenser has the following main components:

- 1x Peristaltic pump
- 1x LCD screen
- 4x Buttons
- 1x Trigger nozzle
- 1x Loadcell
- 1x Peripheral PCB

All the components are attached to the main cabinet, which consists of laser cut and bent metal parts. Some 3d-printed parts are also used, e.g., the button covers.

The dispenser functions as follows:

1. User selects an amount
2. User presses trigger button/nozzle upwards
3. The pump runs for a calibrated time period for the selected volume
4. A receipt is printed out.
5. The dispense event is sent to the cloud interface.

The dispenser load cell weighs the dispenser hopper (5L bottle or jerry can). The loadcell reading can be used to determine if the hopper is empty. Currently though the loadcell implementation is not functional and needs to be redesigned.

Version History

This document pertains to the U-refill project version. A minor upgrade was manually made to improve the flow rate in 2024. Also an alternative and improved hopper bracket was designed, however not implemented during this time. The main PCB was also updated to include a ground plane. Previously it only had ground traces.

Mechanical Components

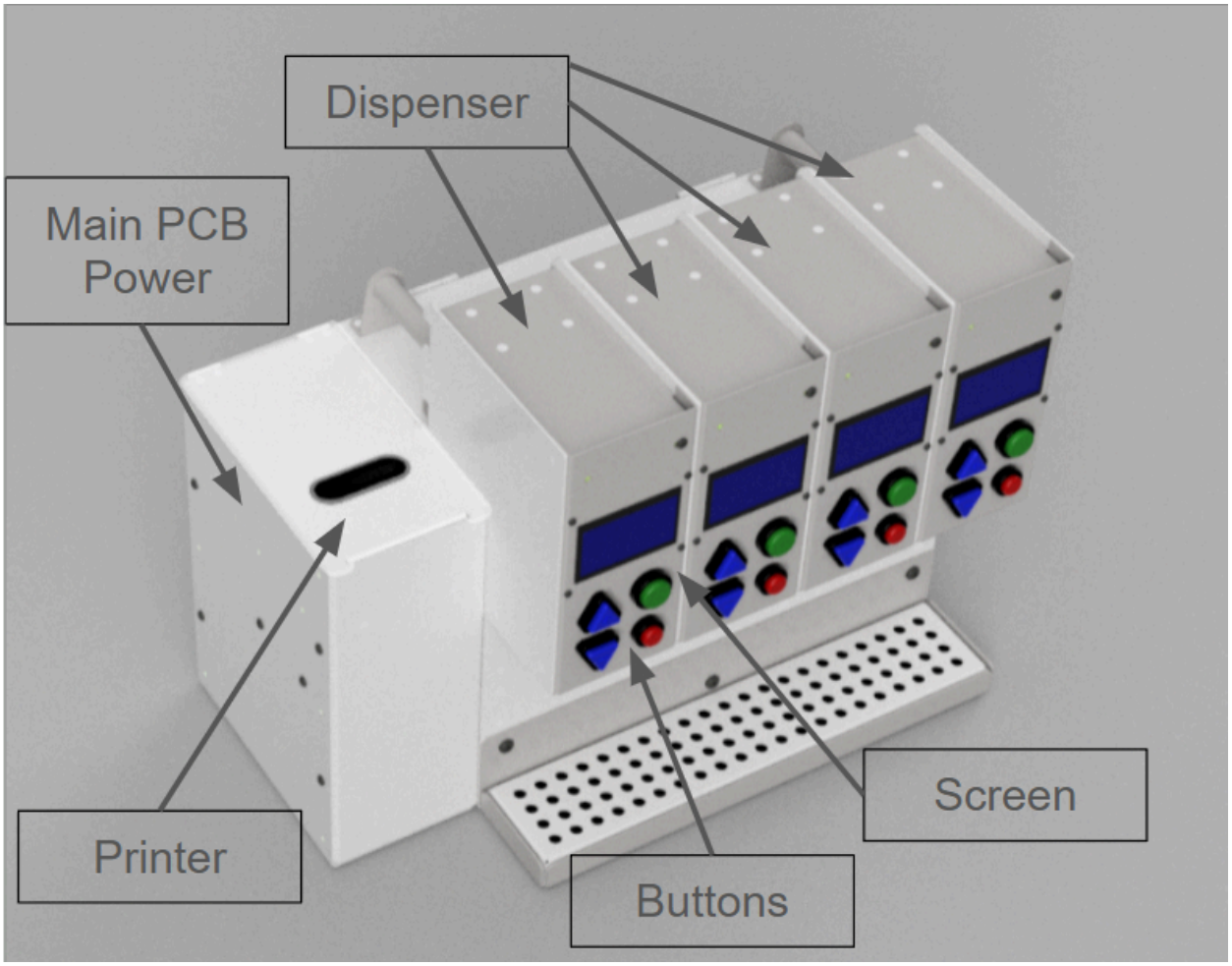

The cabinet has four dispensers, with a shared power supply, main PCB and printer.

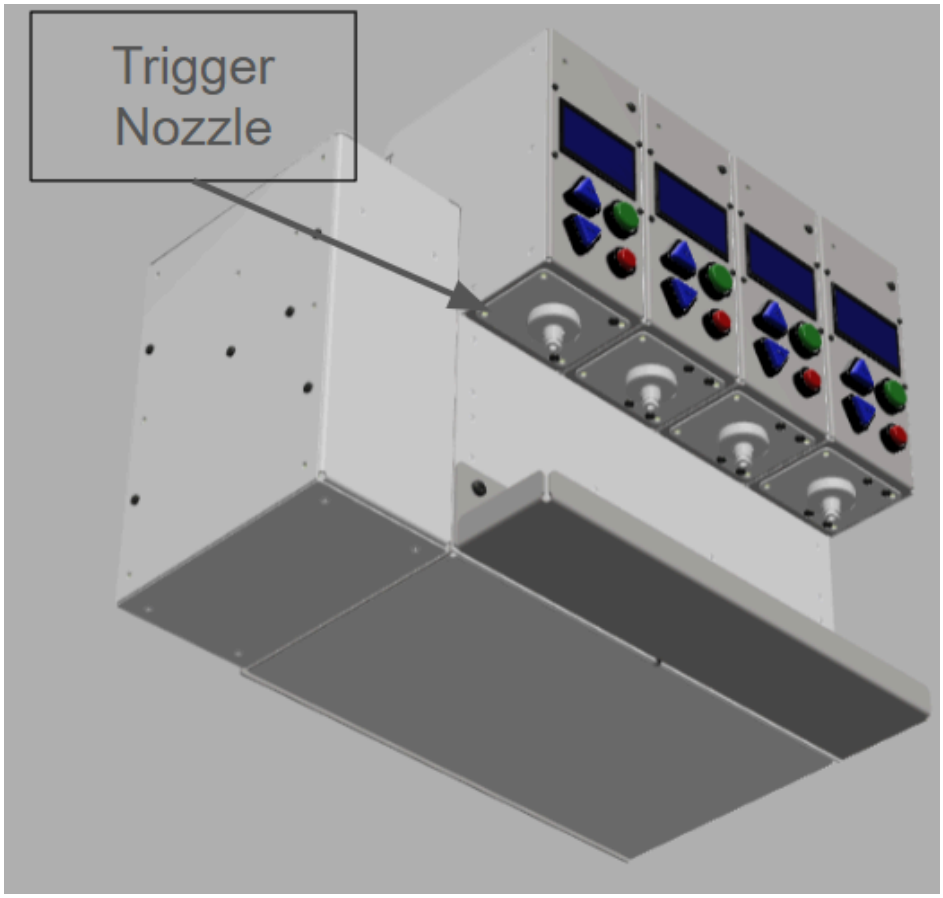

The trigger nozzle - this is pressed up to start dispensing after selecting an amount.

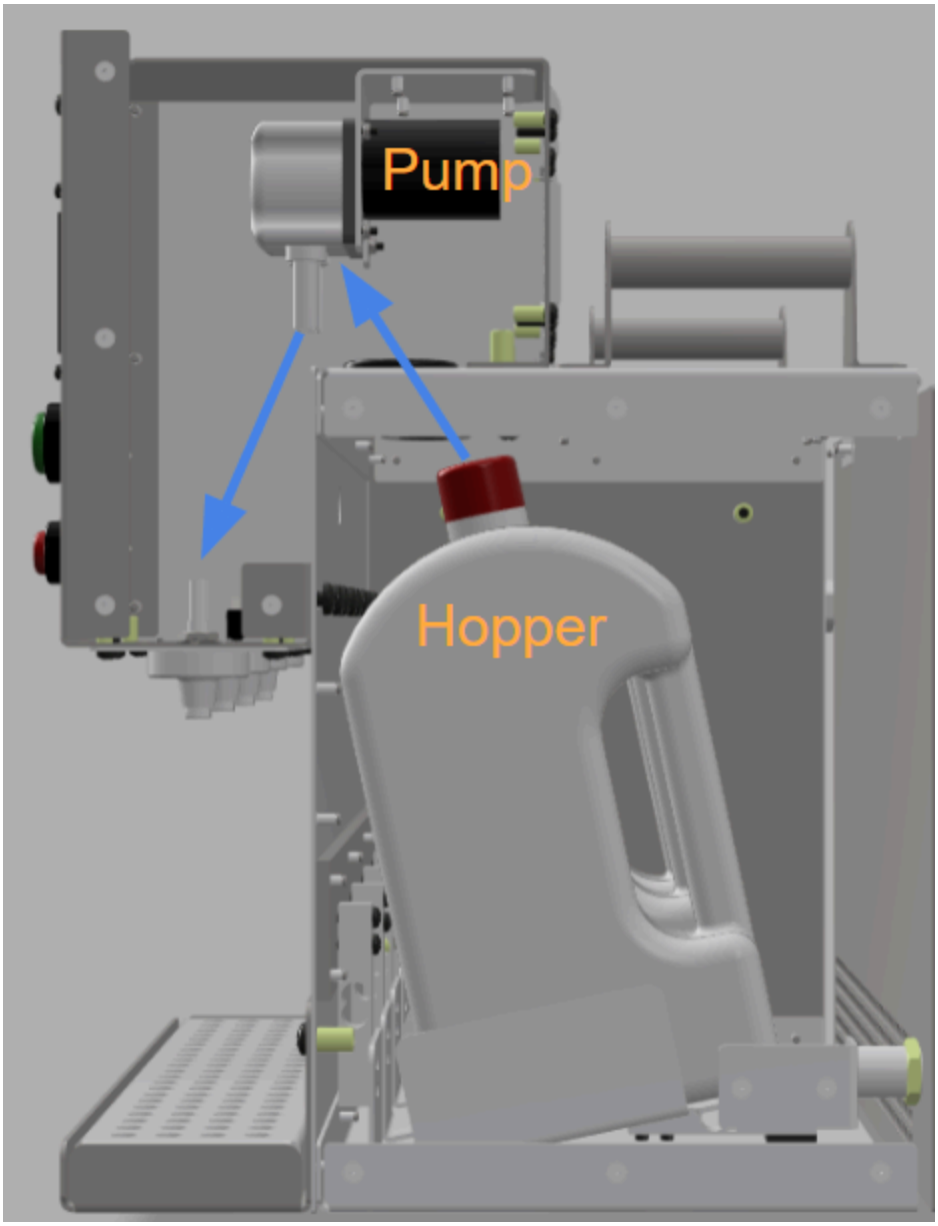

Side view of a dispenser. The hopper (5L jerrycan or bottle), contains the product supply. The motor pumps the liquid through the tube (blue arrows) to the Trigger Nozzle. Note this shows the updated design for the corrected load cell orientation.

Electronics

The main PCB controls all four dispensers. The PCB has three ESP32 development boards. The boards communicate with each other using I2C.

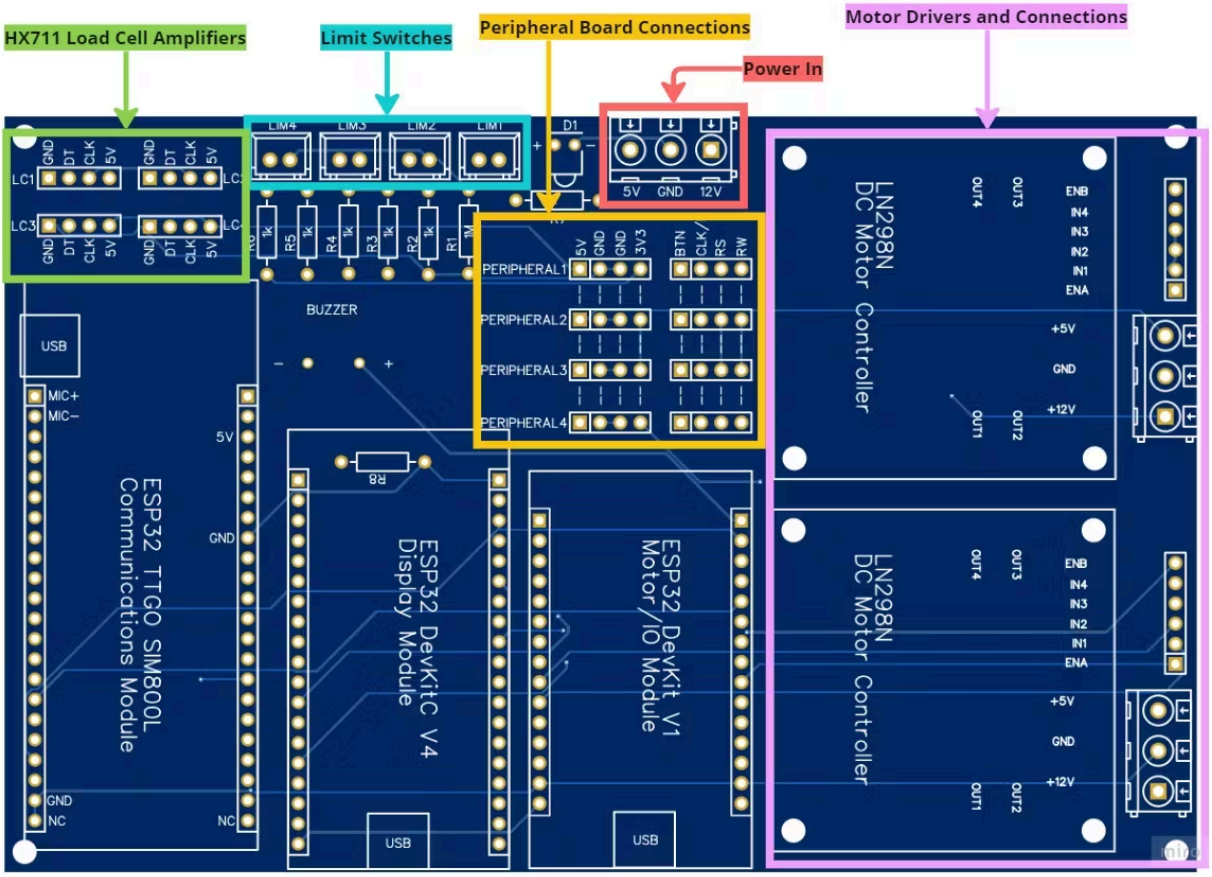

The main PCB with connection headers.

Comms Module

Development Board: *LILYGO TTGO T-Call V1.4 CH9102F QFN24 ESP32 Wireless Module GPRS Antenna SIM Card SIM800L Board*

This ESP communicates with Azure-IoT-Central. The sim-card module mounted on it however does not work with the IoT/ESP internet library, and is not used. A WiFi router is used instead. Internet connection is used to send status updates and dispense events (records) to the cloud database. The current time is also obtained with NTP sync.

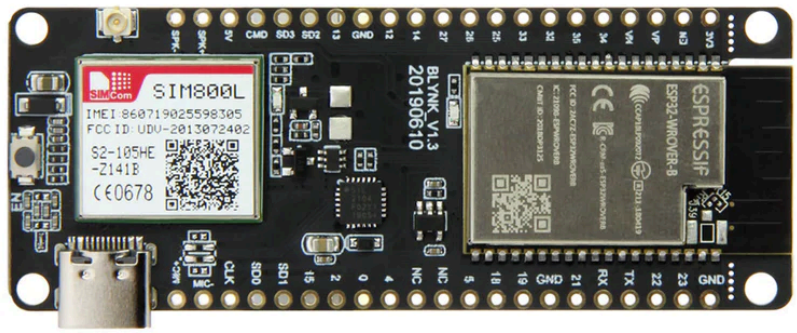

The LilyGo ESP module with SIM card slot

The loadcell ADC boards are also connected to this ESP. But as noted, the load cell circuit and mechanical orientation are not functional. The HX711 module (breakout board) is used to convert the load cell signal into a digital value using an ADC. The ADC digital output might need to be level shifted (5V to 3.3V).

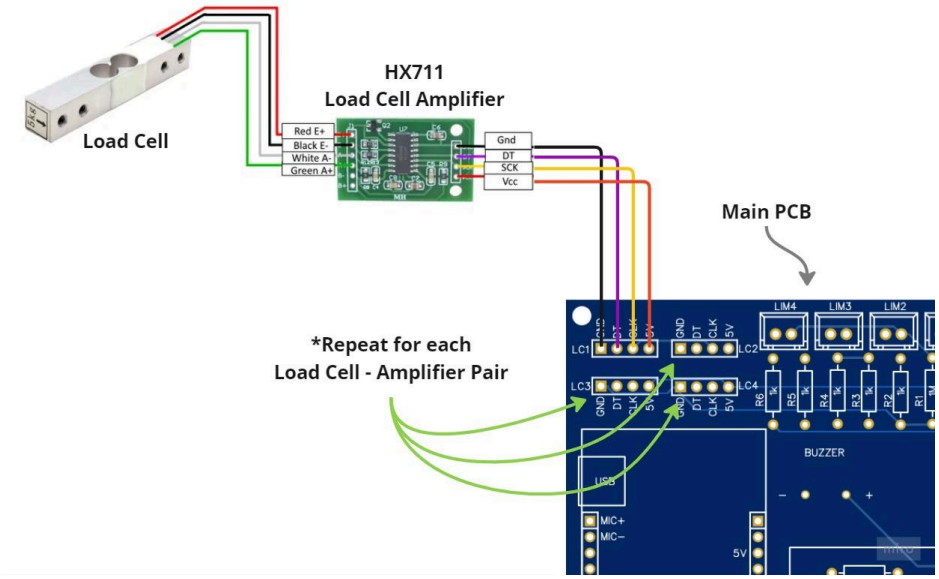

The loadcell connected to an HX711 loadcell ADC and amplifier, which is connected to the main PCB

Display Module

Development Board: *ESP32-WROOM32 DevKitC V4*

This ESP drives all the displays. The display is a 128x64 LCD character display . Currently, the display is set to use only Bangladeshi characters.

The display module connects to each display with the Peripheral PCB.

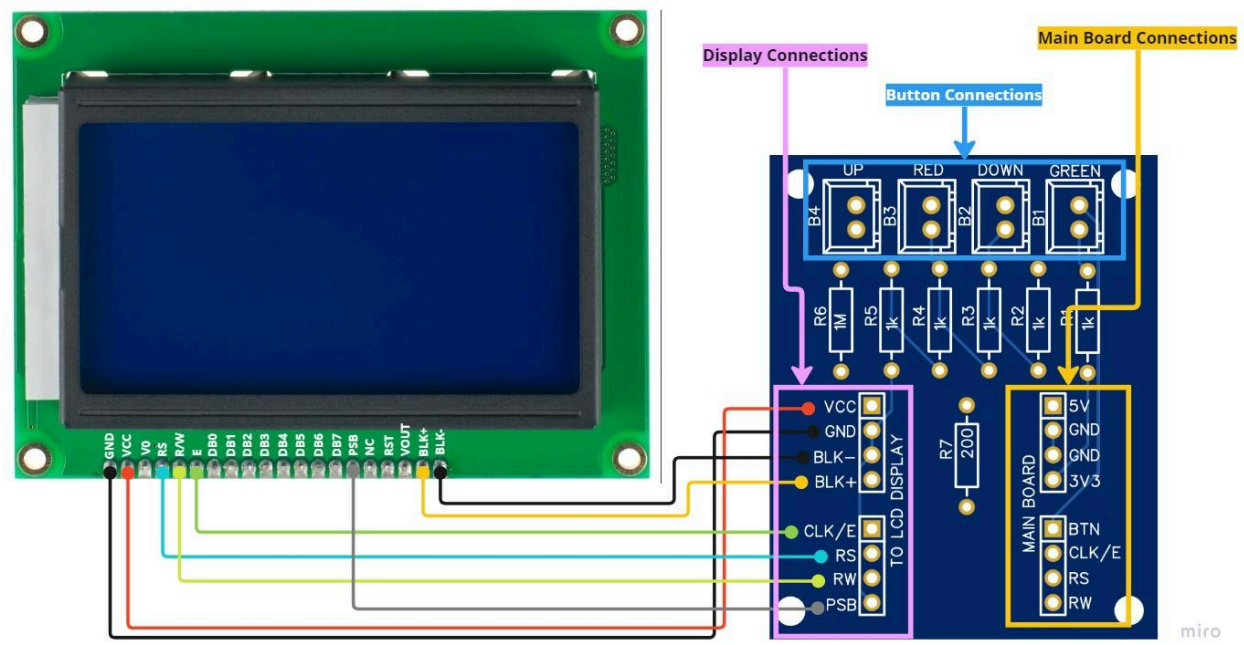

The display module connected to the peripheral PCB

Main (Motor and IO) Module

Development Board: *ESP32-WROOM32 DEVKIT V1*

The main board does the following:

- Controls the four pump motors with DC motor drivers (also breakout boards).
- Check the buttons and trigger status of each dispenser. A resistor ladder is used to reduce the number of input pins required. All the buttons for one dispenser are connected to one pin. The voltage level as read with the ADC is used to determine if a specific button is pressed or not. The four nozzle-trigger buttons are also joined together using the same technique. The buttons are wired via the peripheral PCB to the main PCB.
- Control the buzzer.
- Connects to the Bluetooth printer to print receipts.

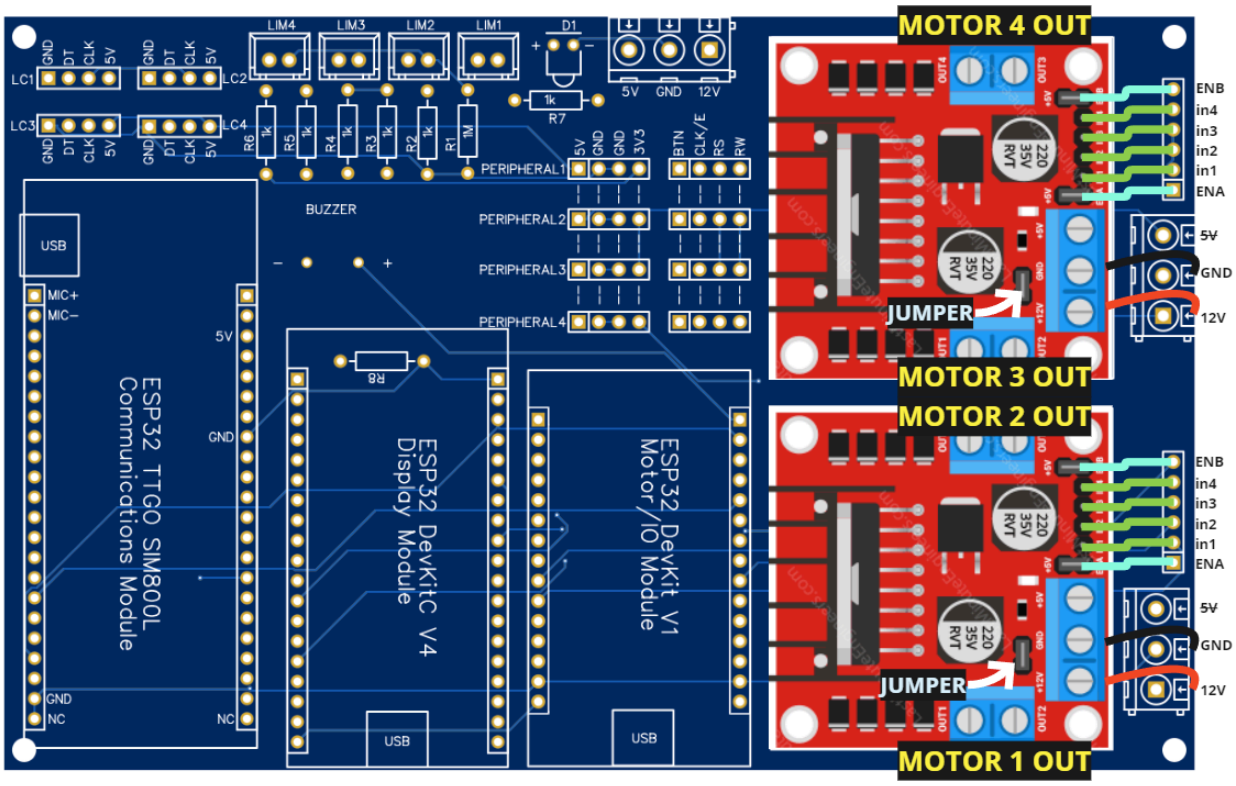

View of motor drivers mounted on the main PCB

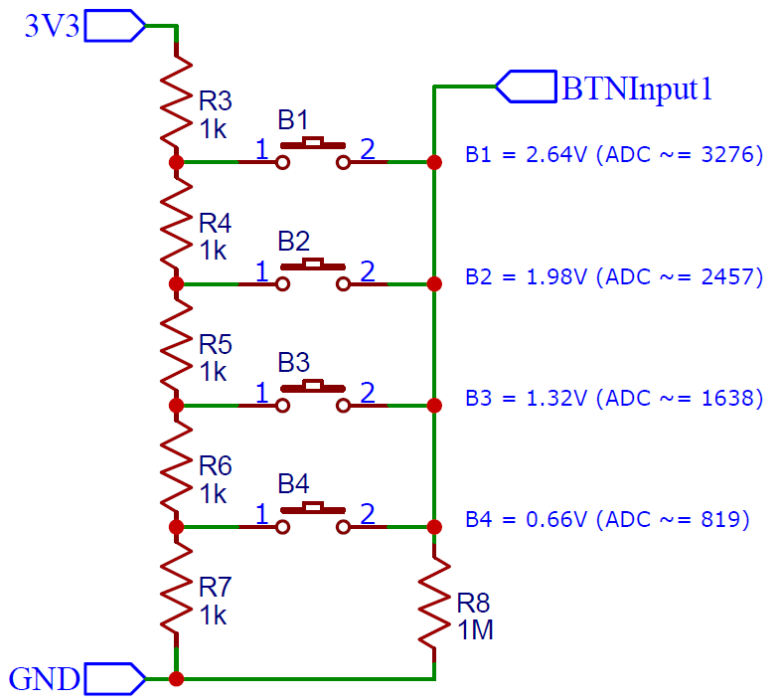

Voltage ladder used for buttons

Pin Assignments: Peripheral PCB to Main Board

Pin Name	Pin Type	Description	Notes
5V	Power	5V Power in	
GND	Ground	Signal ground	
3V3	Analog Input	3.3V reference for button circuit	
BTN	Analog Output	Analog button voltage out	
CLK/E	Serial Clock	Display clock	
RS	Serial Data	Display chip select	
R/W	Serial Data	Display data	

Pin Assignments: Peripheral to Display

Pin Name	Pin Type	Description	Notes
VCC	Power	5V Power	
GND	Ground	Signal ground	
BLK-	Ground	Backlight cathode (-)	
BLK+	Power	Backlight anode (+)	
CLK/E	Serial Clock	Display clock	

RS	Serial Data	Display chip select
R/W	Serial Data	Display data
PSB	Digital Input	Parallel/Serial Bit (0=Serial)

Power Supply

A 12V 10A (120W) power supply with battery connection is used to power the cabinet. A buck converter outputs the 5V power rail, which supplies the screens and ESP boards.

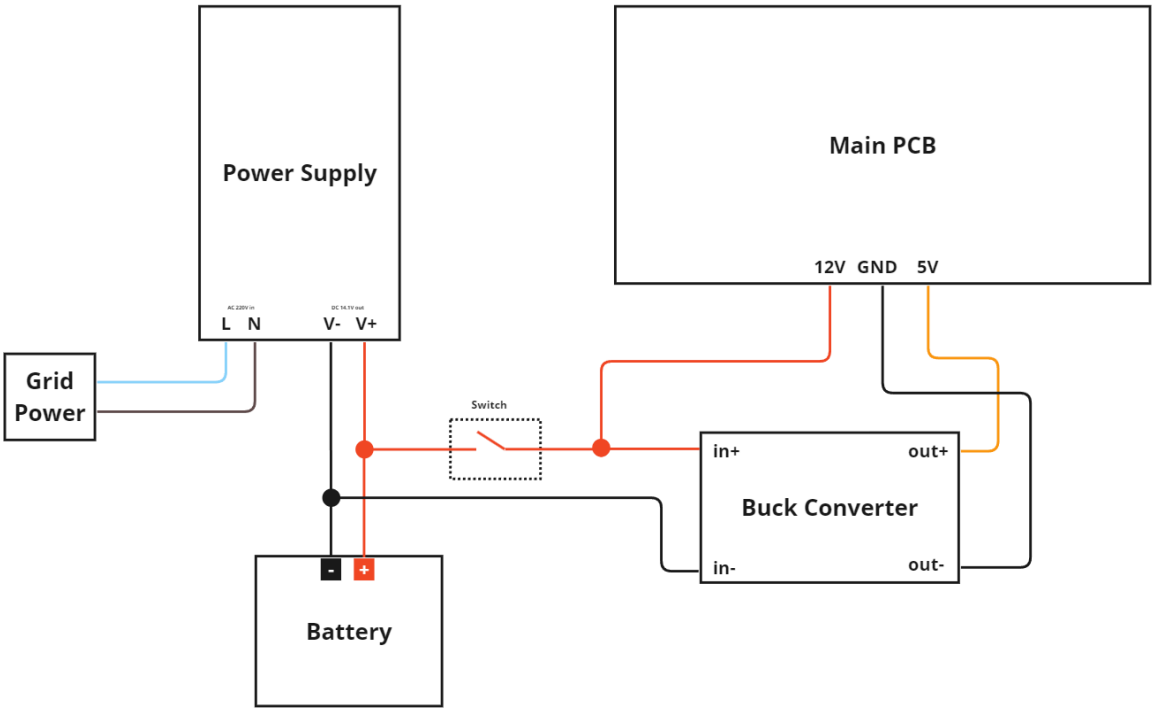

Block diagram of the power supply